Swivel Chair

Pre-Assembly:

- Remove all parts and hardware from the box and lay out on a clear carpeted or scratch-free work surface. (The shipping box provides an ideal work surface), this will avoid damaging any parts during assembly. Do not dispose of any contents until assembly is completed to avoid accidentally discarding small parts or hardware.
- Two people recommended for ease of assembly.
- Use the parts and hardware lists to identify and separate each of the pieces included prior to starting assembly.
- The illustrations provided allow for easier assembly when used in conjunction with the assembly instructions.
- Note: Do not fully tighten all bolts until all parts are in place. Failure to follow these instructions may cause the bolts to misalign during assembly.
- If using power tools to aid in assembly please use caution. Power tools can damage hardware or split wood.

Parts Included :

(A) Chair back –1pc

(B) Chair seat – 1pc

(C) Chair base – 1pc

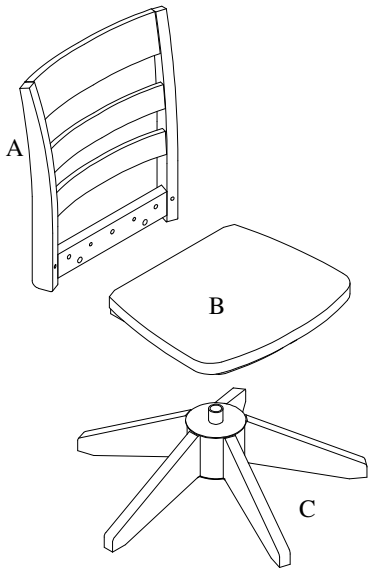

Hardware Included :

(D) 1/4”x 80mm Bolts - 2pcs 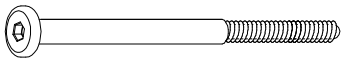

(E) 1/4” x 38mm Bolts - 4pcs 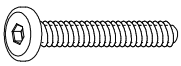

(F) 1/4” x 16mm Bolts – 4pcs 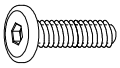

(G) Flat Washer 1/4mm – 6pcs

(H) Spring Washer 1/4mm – 6cs

(I) Cylinder – 1pc

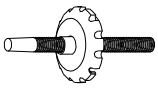

(J) Metal base – 1pc

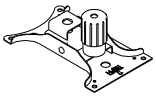

(K) Casters – 5pcs

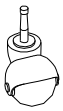

(L) 4mm Allen Key – 1pc

Tools Required :

Phillips Head Screwdriver (not included)

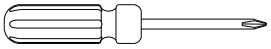

Assembly Instructions

1. Insert Cylinder (I) into hole in Chair Base (C). Locate the Philips head screw found on the black metal cap at the base of the Chair Base (C) as shown below; tighten with a Philips Head Screw Driver.

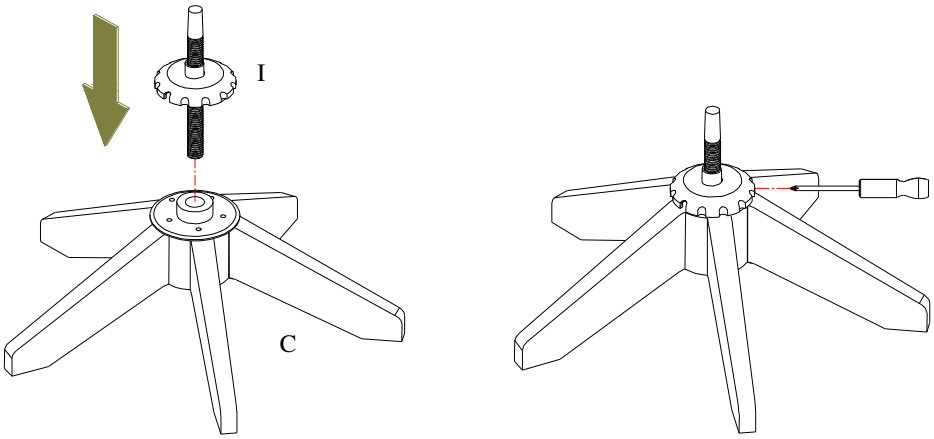

2. Align pin on a Caster (K) with hole located at the bottom of one of the legs; press down on the leg to secure the Caster (K) as firmly as possible into the hole as shown below. Repeat with rest of the Casters (N).

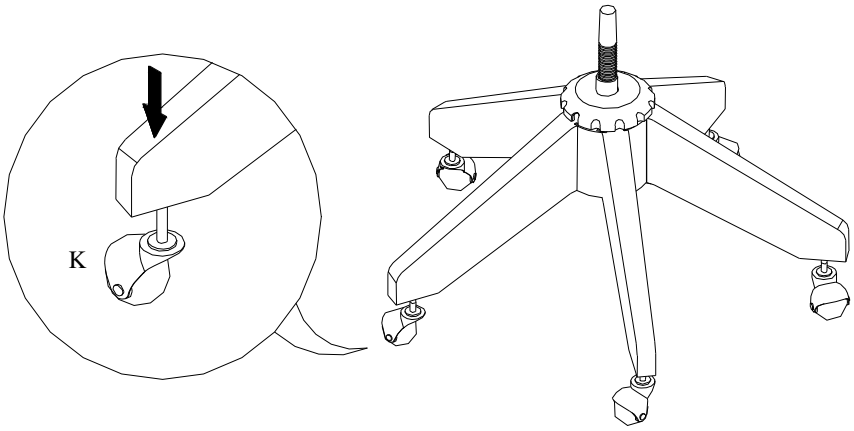

3. Lay down Chair Seat (B) on a carpeted, scratch free surface. Align wooden dowels on chair seat with pre-drilled holes at the bottom rail of Chair Back (A). Attach Chair Back (A) to Chair Seat (B) by inserting 1/4”x 80mm Bolts (D) through pre-drilled holes in both post of Chair Back (A) into metal inserts in Chair Seat (B), and inset 1/4”x 38mm Bolts (E) through pre-drilled holes in the bottom rail of Chair Back (A) into metal inserts in Chair Seat (B) as shown below; Loosely tighten all bolts with Allen Key (L).

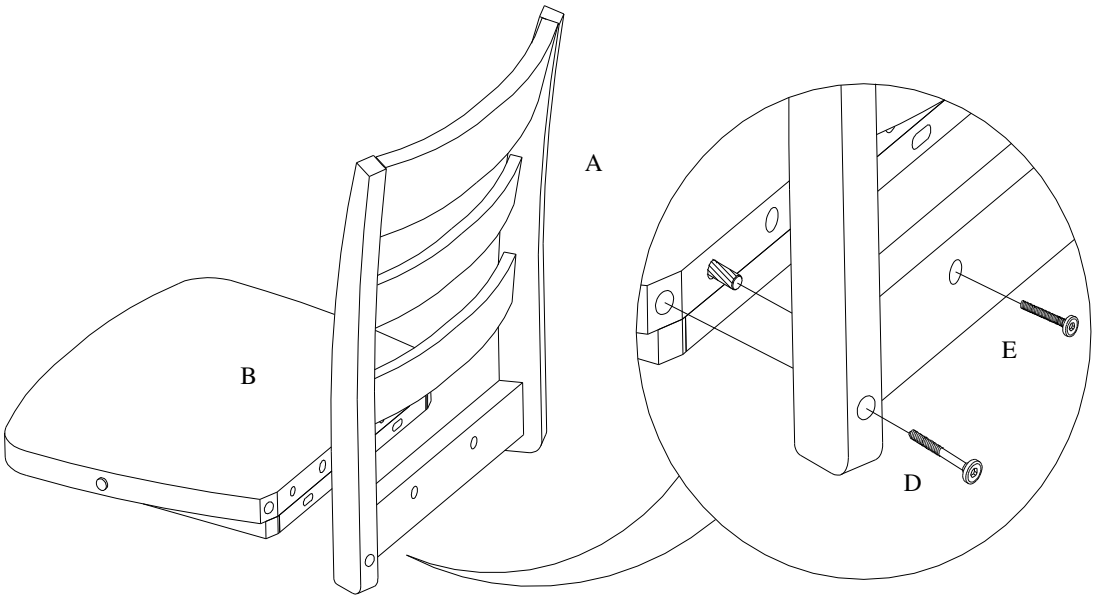

4. Insert 1/4”x 38mm Bolts (E) through Spring Washers (H) , Flat Washers (G) and pre-drilled holes in the bottom rail of Chair Seat (B) into the metal inserts in Chair Back (A) as shown on the left below, loosely tighten bolts after both in place; Attach Metal Base (J) to the bottom of the Chair Seat (B) by Inserting 1/4”x 16mm Bolts (F) through Spring Washer (H), Flat Washer (G) and pre-drilled holes in the Metal base into the metal inserts in Chair Seat (B) as shown in diagram at right; Tighten **ALL BOLTS** in previous assembly steps with Allen Key (L).

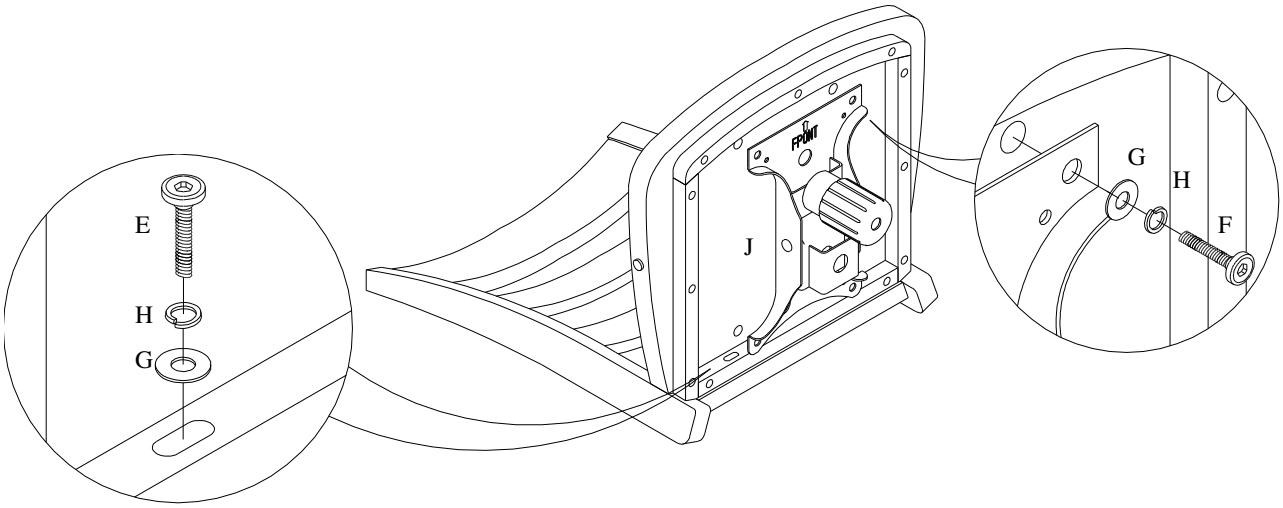

o attach the chair seat to the assembled Chair Base (C), place the hole in the center of Metal Base (J) onto ssembled Cylinder (I). Firmly apply pressure onto the Chair seat (B) with both hands so chair slides onto the ylinder(I) as shown below.

6. To adjust the height of the seat, loosen the Phillips Head Screw found on the black metal cap at the base of the Chair Base (C) with Phillips Head Screwdriver. Hold the black metal cap with one hand while turning the Chair in a counter-clockwise direction to raise or a clockwise direction to lower. Once the seat reaches desired level, re-tighten Phillips Head Screw on the black metal cap as shown below.

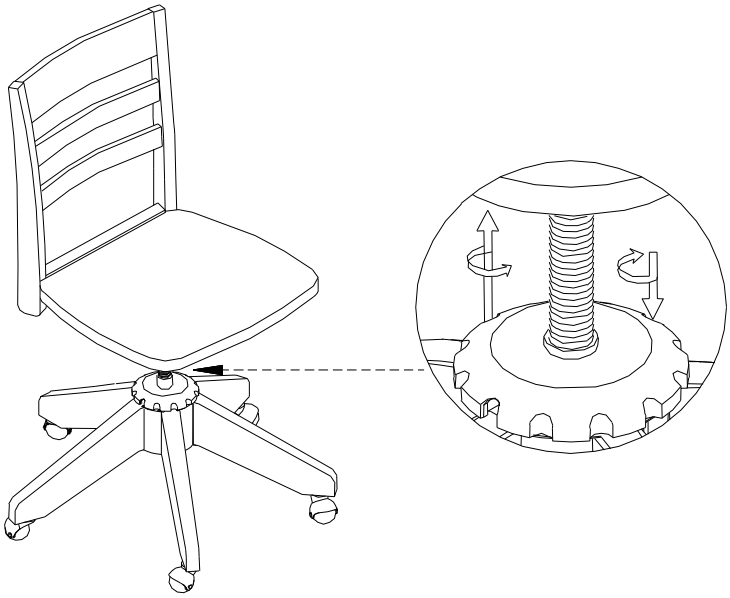

7. To adjust the tilt of the Seat Back, loosen the tilt knob found under the seat by turning in counter-clock wise direction, tilt seat to desired position. Turn tilt knob in clockwise direction to re-tighten.

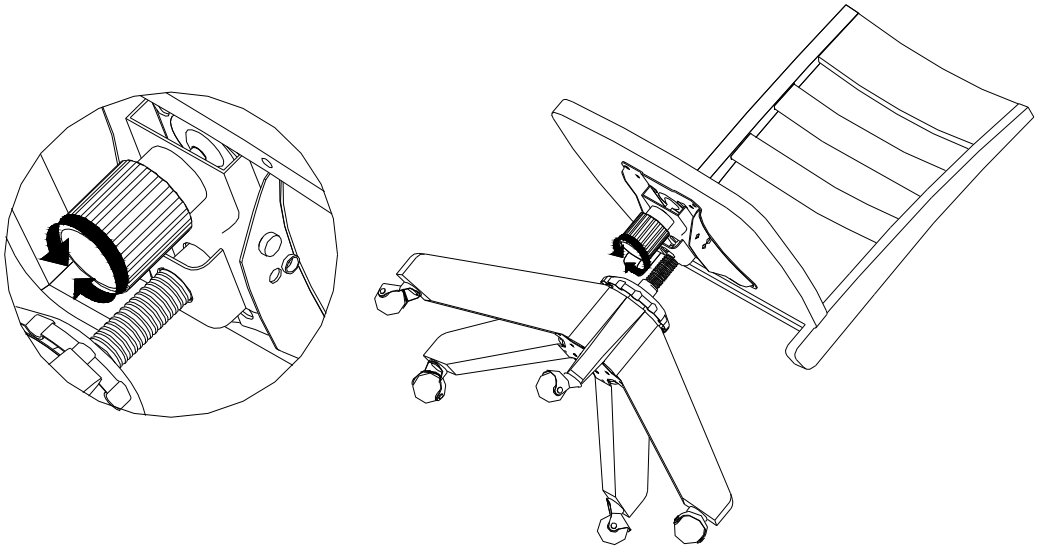

CARE INSTRUCTIONS:

- Waxing is not recommended on lacquered finish.
- Avoid direct sunlight and excessive temperature.
- Dust often using a clean, soft, dry and lint-free cloth.
- Slightly moisten cloth with water. A damp cloth holds dust and prevents scratching.