Small Space Solutions Desk

PRE-ASSEMBLY:

- For your safety and ease, assembly by two adults is recommended.
- Please read all instructions before beginning assembly. The illustrations provided allow for easier assembly when used in conjunction with the assembly instructions.
- Remove all parts and hardware from box and lay out on a carpeted or scratch-free work surface. The shipping box provides and ideal work surface. Do not dispose of any contents until assembly is completed to avoid accidentally discarding small parts or hardware.
- Use the parts and hardware lists to identify and separate each of the pieces included prior to assembly.
- Note: DO not fully tighten the bolts until all parts are in place. Failure to follow these instructions may cause the bolts to misalign during assembly.
- Do not use power drill as it may cause cracking.

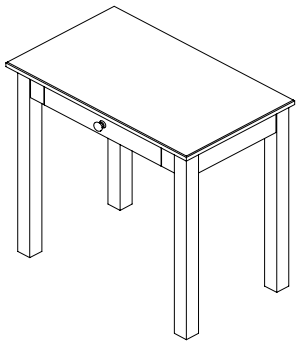

PARTS LIST

A – Leg – 4pcs
B – Desktop – 1pc

HARDWARE LIST

C - Flat Washer – 8pcs	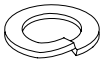 D - Spring Washer – 8pcs	E – Nut – 8pcs	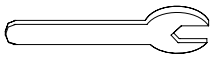 F – Wrench – 1pc

ASSEMBLY INSTRUCTIONS:

1. Place the Desktop (B) upside down on a soft, carpeted work place. Attach the (4) Legs (A) to the Desktop using (8) Flat Washer (C), (8) Spring Washer (D) and (8) Nuts (E) in place and secure with a Wrench (F). Upright the assembled Desk and adjust the levelers located on bottom of feet when required.

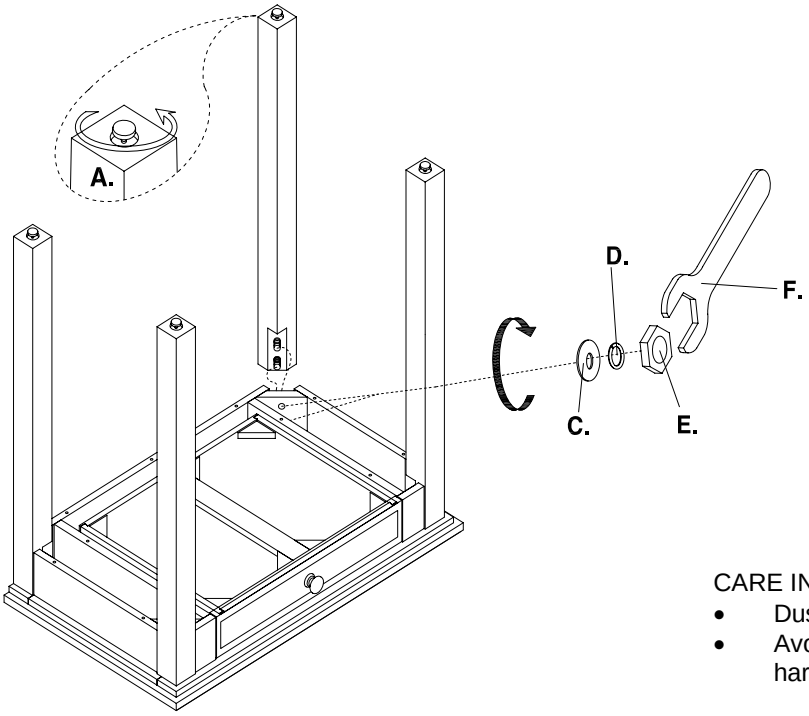

CARE INSTRUCTIONS:

- Dust with a clean, soft cloth.
- Avoid the use of chemicals and harsh cleaning agents.

Small Space Solutions Desk Hutch

PRE-ASSEMBLY:

- For your safety and ease, assembly by two adults is recommended.
- Please read all instructions before beginning assembly. The illustrations provided allow for easier assembly when used in conjunction with the assembly instructions.
- Remove all parts and hardware from box and lay out on a carpeted or scratch-free work surface. The shipping box provides and ideal work surface. Do not dispose of any contents until assembly is completed to avoid accidentally discarding small parts or hardware.
- Use the parts and hardware lists to identify and separate each of the pieces included prior to assembly.
- Note: DO not fully tighten the bolts until all parts are in place. Failure to follow these instructions may cause the bolts to misalign during assembly.
- Do not use power drill as it may cause cracking.

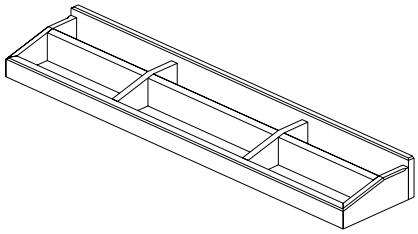

PARTS LIST

A – Hutch

HARDWARE LIST

B – Mending Plate 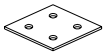 2pcs

C – Wood Screw 3x12mm 8pcs

TOOLS REQUIRED (but not included): Phillips Screwdriver 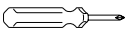

ASSEMBLY INSTRUCTIONS:

2. Place the Hutch (A) on the Laptop Desk (sold separately). Align Mending Plate (B) over the pre-drilled holes and secure with Wood Screws (C) as shown below. Repeat with the other Mending Plate.

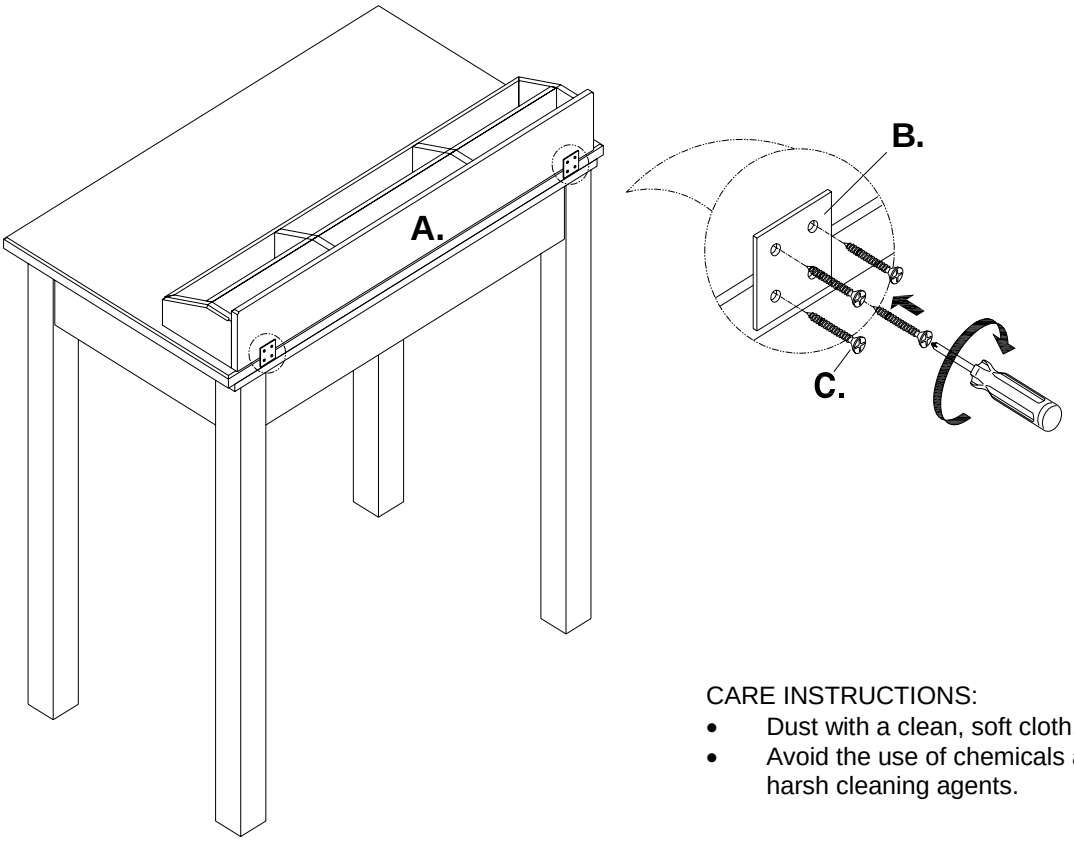

CARE INSTRUCTIONS:

- Dust with a clean, soft cloth.
- Avoid the use of chemicals and harsh cleaning agents.