Hampton Storage Bed

PRE-ASSEMBLY:

- For your safety and ease, assembly by two adults is recommended.
- Read all instructions before beginning assembly.
- Remove all parts and hardware from box and lay out on a carpeted or scratch-free work surface. The shipping box provides and ideal work surface. Do not dispose of any contents until assembly is completed to avoid accidentally discarding small parts or hardware.

PARTS INCLUDED:

A – Headboard – 1 pc

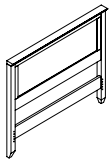

B – Footboard – 1 pc

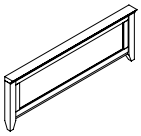

C – Siderail Box – 2 pcs

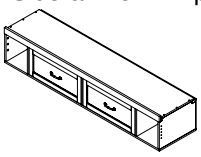

D – Center Panel – 4 pcs

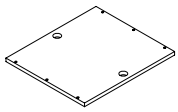

E – Support Leg – 1 pc

HARDWARE INCLUDED:

F – Long Hex Bolt – 12 pcs

G – Short Hex Bolt – 8 pcs

H – Big Spring Washer – 12 pcs

I – Big Flat Washer – 12 pcs

J – Small Spring Washer – 8 pcs

K – Small Flat Washer – 8 pcs

L – Phillip Head Screw – 24 pcs

M –Wooden Dowel – 8 pcs

N –Allen Key – 1 pc

O –Leveler – 4 pcs

P – Wooden Block – 4 pcs

TOOLS REQUIRED (but not included):

- Phillip Head Screwdriver

ASSEMBLY INSTRUCTIONS:

1. Lay the Siderail Box (C) upside down on a soft, scratch-free surface.
2. Attach the Leveler (O) to the bottom of the Siderail Box (C) using a Small Spring Washer (J), Small Flat Washer (K) and a Short Hex Bolt (G), insert through the pre-drilled holes on the Leveler (O) and into the pre-drilled hole on the bottom of the Siderail Box (C) as shown below; tighten using the Allen Key (N).
3. Attach the Support Leg (E) to the center bottom of the Siderail Box (C) by screwing the Support Leg (E) with bolt pre-attached into the pre-drilled holes on center bottom of the Siderail Box (C) as shown below.

Figure 1

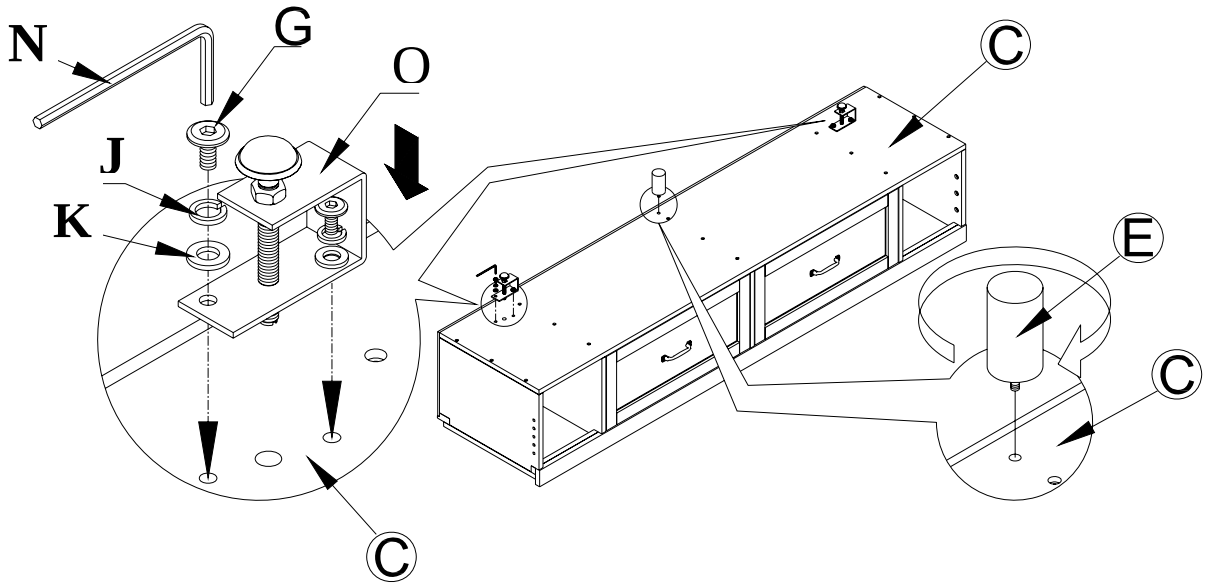

4. Repeat Steps1-3 for the other Siderail Box (C).
5. Turn Siderail Boxes (C) upright. Place the Wooden Blocks (P) under the Siderail Boxes for support with leveling as shown below. Adjust Levelers (O) until they sit level with the Support Leg (E). Align the Siderail Boxes (C) so they are parallel and remove Wooden Blocks (P).
6. Insert one end of the Wooden Dowels (M) into the pre-drilled holes on the headboard end of the Siderail Box (C) and the other into the corresponding holes in the legs of the Headboard (A). Insert a Big Spring Washer (H), Big Flat Washer (I) and Long Hex Bolt (F) through the other pre-drilled holes of the Siderail Box (C) into the pre-drilled holes in the leg of the Headboard (A) as shown below. Do not fully tighten the Long Hex Bolt (F) until all are in place to avoid misalignment; tighten with the Allen Key (N). Repeat for the Footboard (B).
7. Adjust the recessed levelers located at the base of each leg and underneath both Siderail Box (C) by turning counter-wise until level.

Figure 2

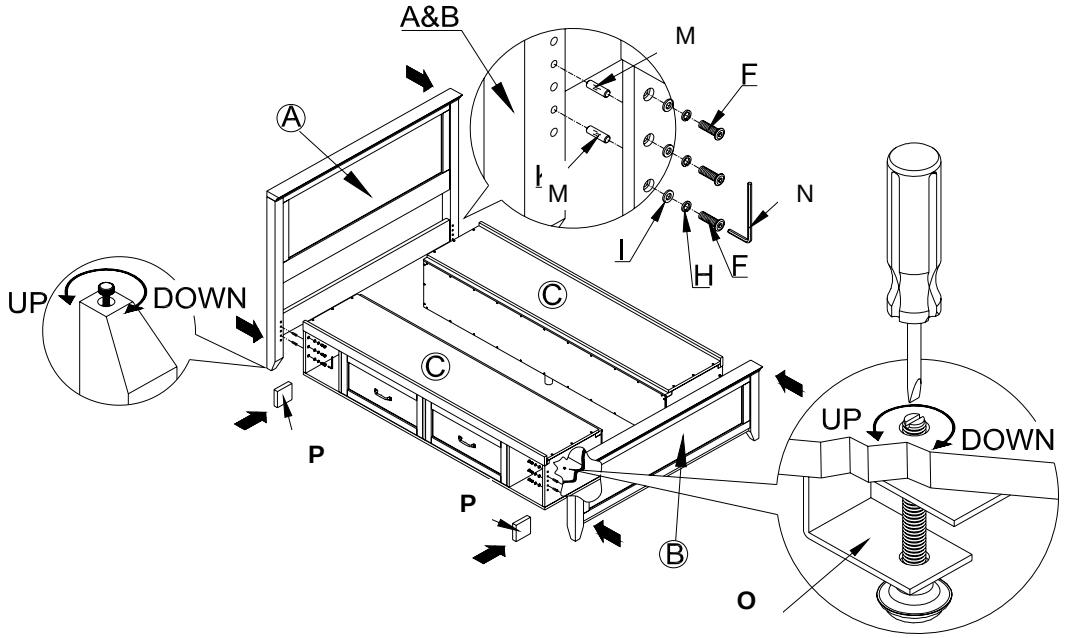

8. Lay the Center Panels (D) over the inner groves on both Siderail Boxes (C) as shown below. Insert Phillips Head Screws (L) in the pre-drilled holes; tighten using a Phillips Head Screwdriver.

Figure 3

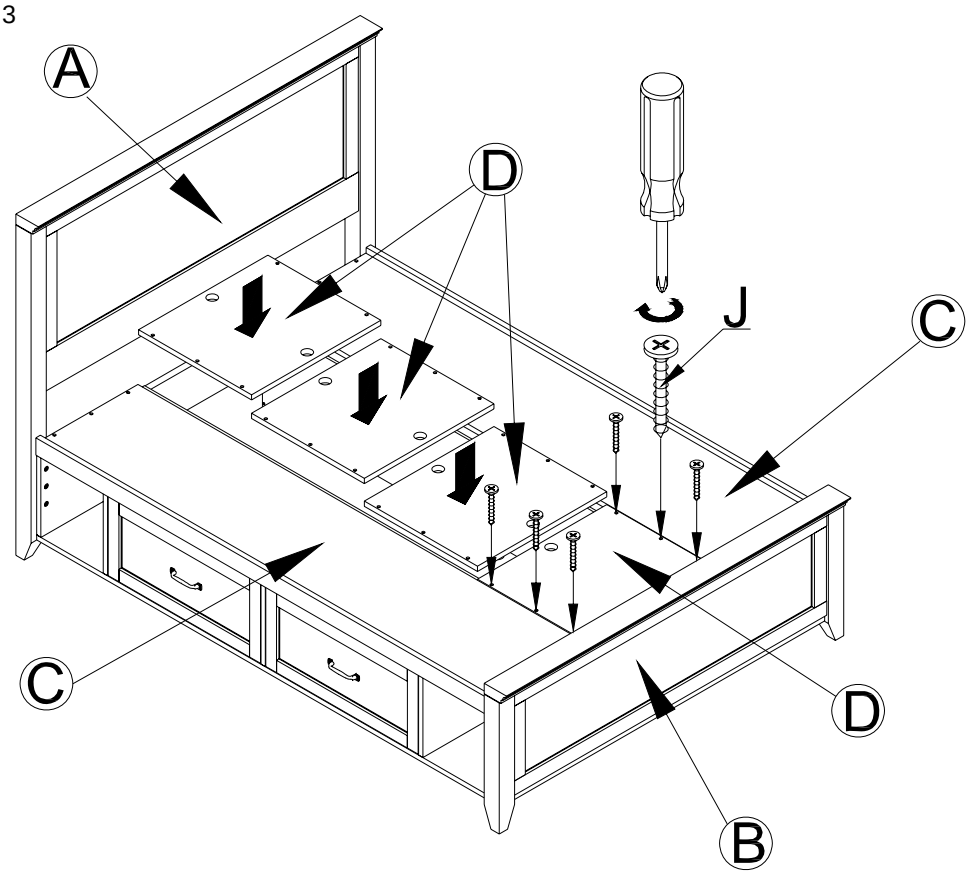

CARE INSTRUCTIONS:

- Avoid direct sunlight and excessive temperatures.
- Dust often using a clean, soft, dry and lint-free cloth.
- Waxing is not recommended on lacquered finish.
- Hardware should be checked periodically for tightness.

Hampton Shelf Tower

PRE-ASSEMBLY:

- Please read all instructions before assembling.
- For your safety, assembly by two adults is recommended.
- Save all packing materials until assembly is complete to avoid accidentally discarding smaller parts or hardware.
  Avoide the use of a power drill as it may cause cracking.

PARTS INCLUDED:

A –Tower – 1 pc

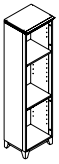

B –Small Door – 1 pc

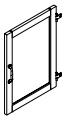

C –Big Door – 1 pc

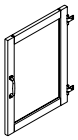

D –Shelf – 5 pcs

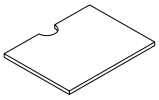

HARDWARE INCLUDED:

E – Shelf Peg – 20 pcs

F – Phillips Head Screw – 12 pcs
(#6x15mm)

TOOLS REQUIRED (but not included):

Phillip Head Screwdriver

ASSEMBLY:

9. Both Big and Small Door (B&C) come with hinges attached and is designed for left or right orientation. Pilot holes are provided on the interior side of the Tower (A) for this purpose. Lie the Tower (A) on the floor, align the hinges of the Big and Small Door (B&C) with the pre-drilled holes on the Tower (A) as shown below.

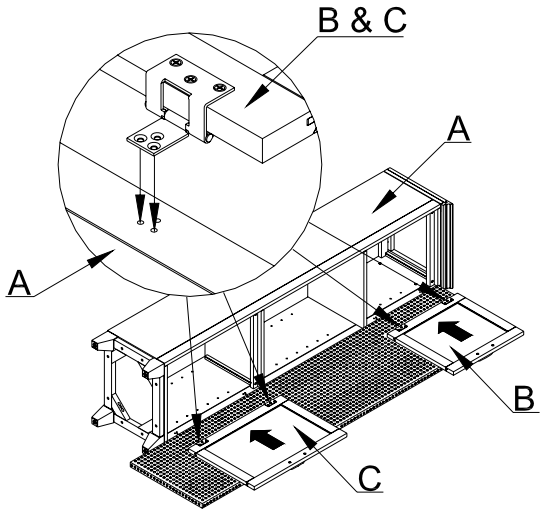

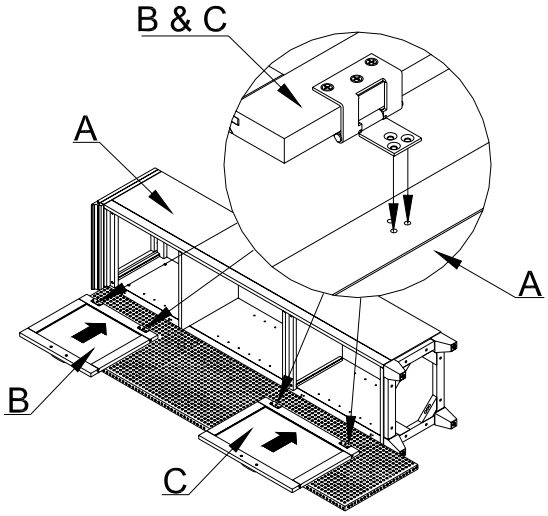

10. Place Phillips Head Screws (F) through the pre-attached hinge into the pre-drilled holes located on the Tower (A); tighten using a Phillips Head Screwdriver as shown. Repeat for other door.

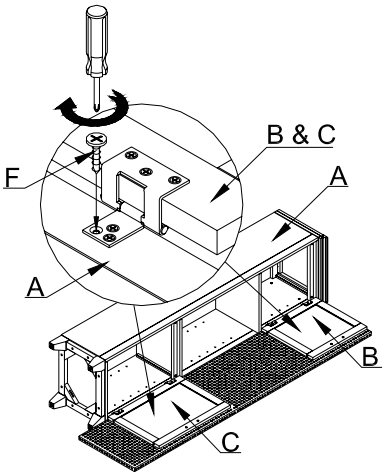

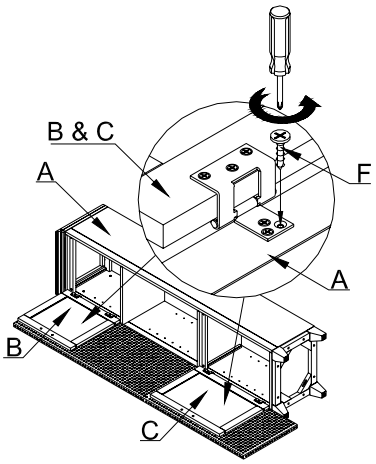

11. Determine the desired level for the Shelves (D). Insert the Shelf Pegs (E) into the pre-drilled holes on the interior sides of the Tower (A). Gently rest the Shelf (D) on top of the Shelf Peg (E), as shown below.

12. If Tower does not sit level, adjust the recessed levelers located at the base of each leg.

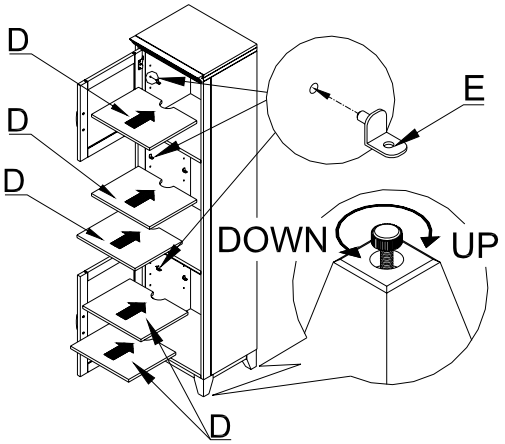

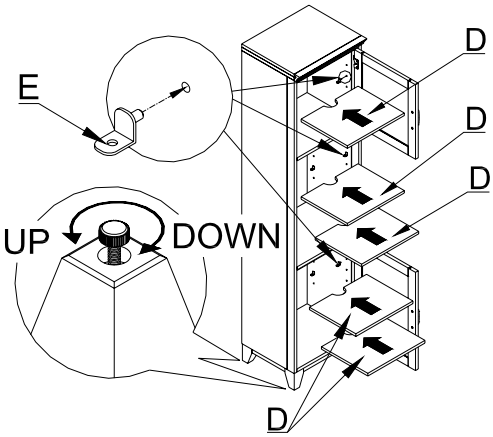

CARE INSTRUCTIONS:

- Avoid direct sunlight and excessive temperatures.
- Dust often using a clean, soft, dry and lint-free cloth.
- Waxing is not recommended on lacquered finish.
- Hardware should be checked periodically for tightness.

Hampton Hutch

PRE-ASSEMBLY:

- Please read all instructions before assembling.
- For your safety, assembly by two adults is recommended.
- Save all packing materials until assembly is complete to avoid accidentally discarding smaller parts or hardware.

PARTS INCLUDED:

A – Hutch – 1 pc

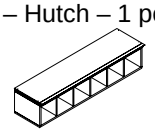

PARTS REQUIRED (but not included):

B – Left & Right Shelf Tower

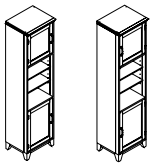

HARDWARE INCLUDED:

C – Connecting Sleeve – 4 pcs

D – Connecting Screw – 4 pcs

E – Phillips Head Screw – 8 pcs

F – Mending Plate – 4 pcs

G–Drill Bit – 1 pc

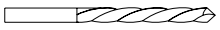

H – Wooden Block – 1 pc

TOOLS REQUIRED (but not included):

Phillip Head Screwdriver

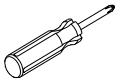

Power Drill

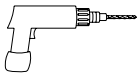

ASSEMBLY:

13. Attach the Drill Bit (G) to the Power Drill. Locate the partially-drilled holes on the inside of Hutch (A). Hold and press Wood Block (H) on the opposite side of the hole to prevent any breakage or damage when drilling as shown below in Figure 1. Lay Left & Right Shelf Tower (B) on the floor and repeat the same step for the Towers (B). **Please Note:** Be cautious to keep hands away from moving drill bit.

Figure 1

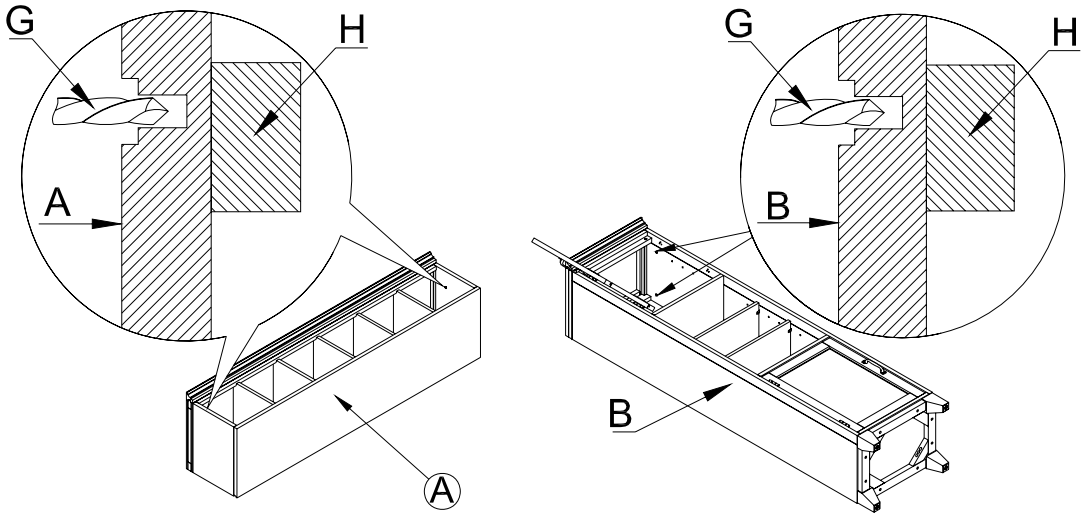

14. Align the pre-drilled holes of the Mending Plate (F) to the pre-drilled holes on the top of the Hutch (A). Insert a Phillips Head Screw (E) through the pre-drilled holes of the Mending Plate (F) and into the pre-drilled holes on top of the Hutch (A); tighten using a Phillips Head Screwdriver as shown below.

Figure 2

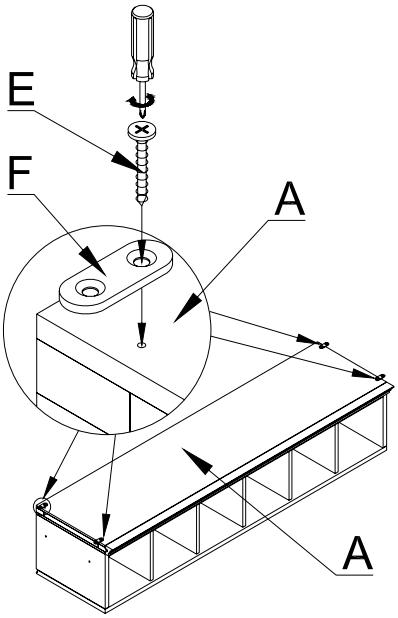

15. Turn Left & Right Shelf Tower (B) upright; ensure the Towers (B) are completely level before attaching the Hutch (A), so that they align at a 90 degree angle to the Hutch (A) once assembly had been completed.
16. Using two people place the Hutch (A) in between the two Towers (B). Place the Connection Sleeve (C) into the pre-drilled holes on the interior ends of the Hutch (A) and the Connecting Screw (D) into the pre-drilled holes on the interior sides of the Left & Right Shelf Towers (B) as shown below. Tighten the Connecting Sleeve (C) and Connecting Screw (D) together using a Phillips Head Screwdriver. Repeat with the remaining 3 Connecting Sleeves (C) and Connecting Screw (D).

Figure 3

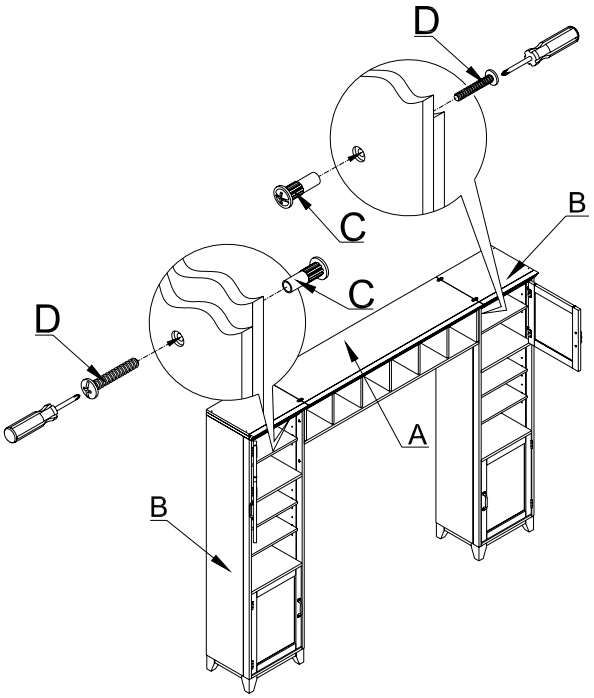

17. Align the assembled Mending Plate (F) over the pre-drilled holes on the top of the Left & Right Shelf Tower (B). Insert the Phillips Head Screw (E) through the pre-drilled holes of the Mending Plate (F) and into the pre-drilled holes on the top of the Left & Right Shelf Tower (B); Tighten using the Phillips Head Screwdriver as shown below.

Figure 4

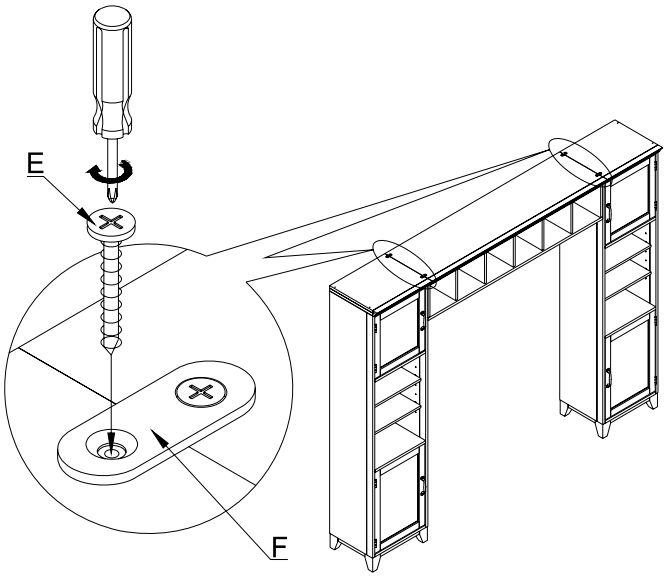

CARE INSTRUCTIONS:

- Avoid direct sunlight and excessive temperatures.
- Dust often using a clean, soft, dry and lint-free cloth.
- Waxing is not recommended on lacquered finish.
- Hardware should be checked periodically for tightness.