Classic Iron Bed - Queen and King Size

Pre-assembly:

Please read all instructions before assembly.

For your safety, two adults are recommended for assembly.

Parts and Hardware Included:

A - Headboard – 1pc

B – Footboard – 1 pc

C - Side Rails – 2pcs 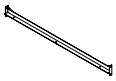

D – Support Slat – 2pcs

J – Finials – 4pcs

K – Middle Support Slat – 1pc

L – Metal Support Legs – 4pcs

M – Bolt ¼"x1" – 12pcs

N – Lock Washer – 14pcs

O – Metal Washer – 24pcs

P – Nuts ¼" – 6pcs

Q – Wrench – 1pc 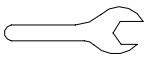

S – Rubber Washer ¼" – 8pcs

R – Allen Key – 1pc

T – Short Bolt ¼" x ¾" – 6pcs

Assembly Instructions:

1. Determine the desired location of bed. Insert Siderails (C) into the Headboard (A) and Footboard (B) by aligning the pre-drilled holes on the Siderails (C) with those on the Headboard (A) and Footboard (B). Secure using Bolts (M), Rubber Washers (S), Metal Washers (O) and Lock Washers (N), as illustrated. Loosely tighten Bolts (M) with the Allen Key (R) until all are in place. Then, fully tighten.

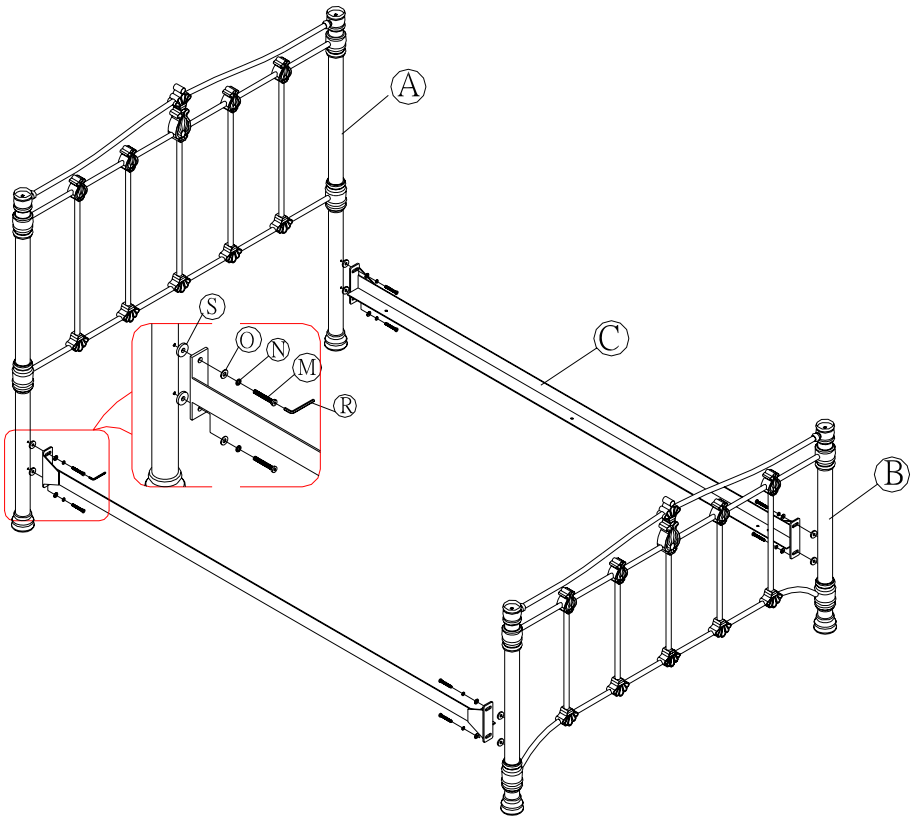

2. Put the Support Slats (D) & Middle Support Slat (K) onto Siderails (C) as shown. Align the pre-drilled holes on Support Slats (D & K) to the pre-drilled holes on Siderails (C). Secure using Short Bolts (T), Lock Washer (N), Metal Washer (O) and Nuts (P), as illustrated. Tighten the Bolts (T) with Allen Key (R) and Wrench (Q).

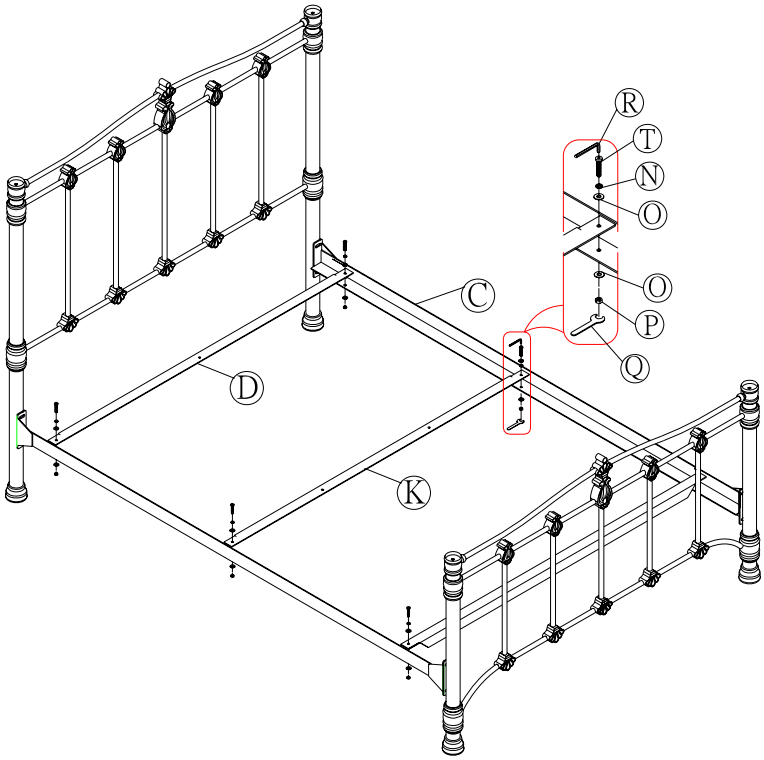

3. Align the pre-drilled holes of the Support Legs (L) to the pre-drilled holes of Support Slats (D&K). Secure with Bolts (M), Metal Washer (O). Tighten using Allen Key (R).

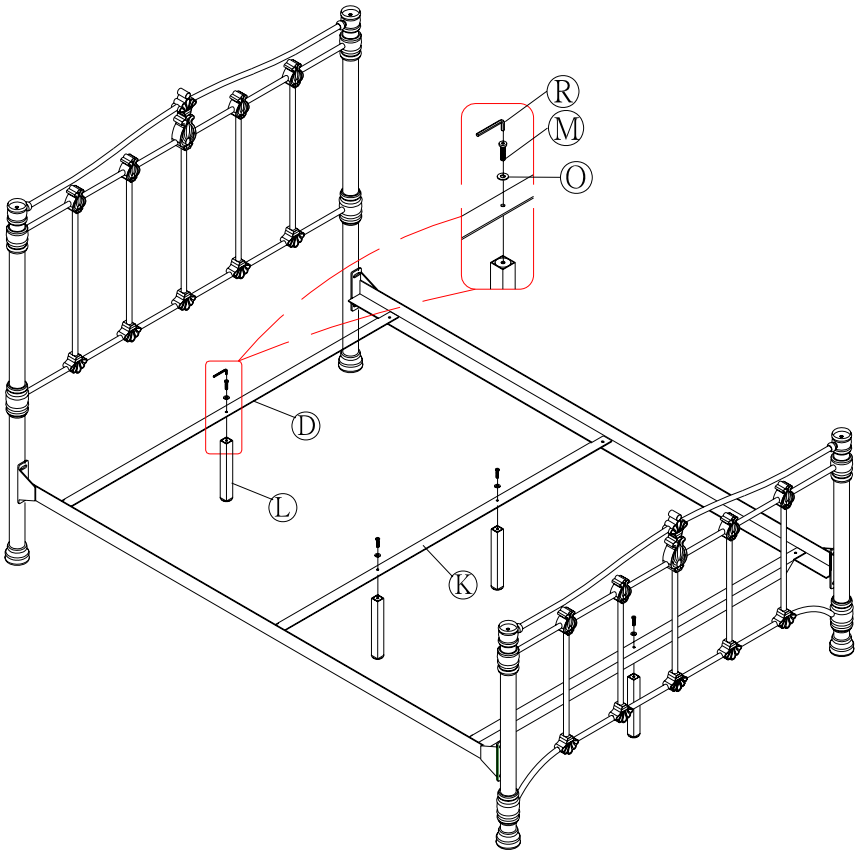

4. Insert Finials (J) through pre-drilled hole on the top of the Headboard (A) and Footboard (B), then tighten by turning clockwise.

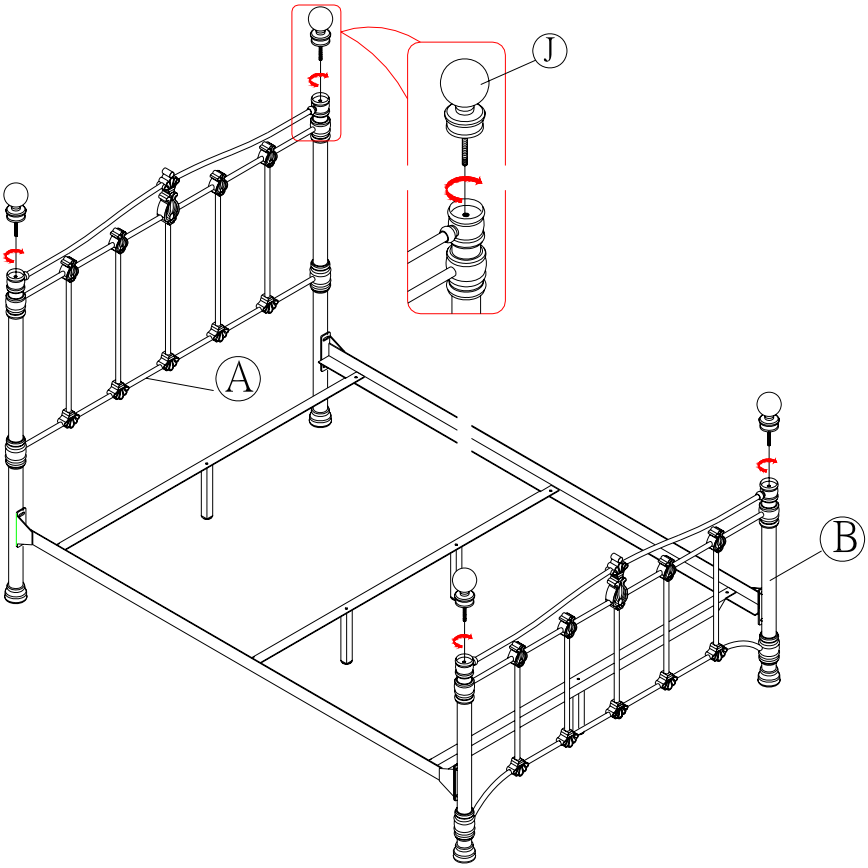

Care Instructions:

Dust with a soft, dry or slightly damp cloth. Avoid the use of cleaners and polishes.