# Box Spring Frame

**Pre-Assembly:**

- Please read all instructions before beginning assembly.
- For your safety and convenience, assembly by two people is recommended.
- Remove all parts and hardware from packaging. Do not discard any contents until after assembly is complete to avoid accidentally discarding small parts or hardware.

**Parts Included:**

All Sizes:

A - (2) Side rails with swing-out cross arms
B - (2) Headboard brackets
C - (4) Leg sockets
D - (4) Casters

Additional parts for Queen:

E - (1) Cross support rail with one support leg
F - (1) Plastic glide

**Hardware Included:**

All Sizes:

G - (2) Headboard bracket bolts
H - (2) Headboard bracket nuts
I - (2) Plastic sheet savers
J - (4) 3 ½" screws (to attach headboard)
K - (4) Lock nuts (to attach headboard)

Additional hardware for Queen:

L - (2) Cross support screws
M - (2) Cross support nuts

**Tools Required:**

Two 7/16" or adjustable wrenches – (not included)
Slotted screw driver – (not included)

**Assembly Instructions for Twin/Full:**

1. Lay side rails on floor with attached cross arms (A) facing inward. Swing cross arms out to 90-degree angles.
2. Overlap cross arms. Insert rivet heads on one cross arm into the proper keyholes on the other cross arm. For a twin, all three rivets must be inserted. For a full, two rivet heads will be inserted. (See detail shown.) Slide cross arms apart to lock in place.
3. Insert a socket (C) and caster (D) into the opening at the bottom of each leg.

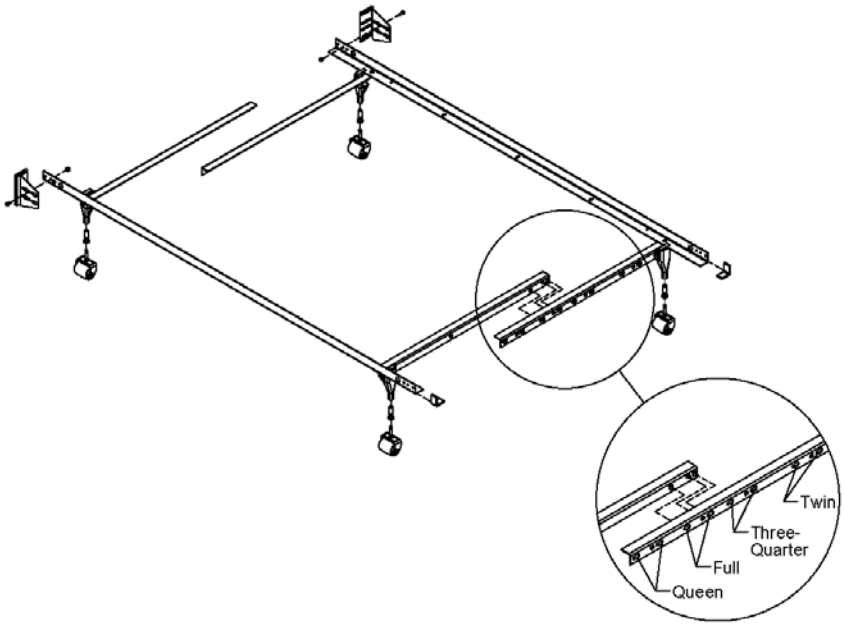

4. Slide sheet savers (I) onto open ends of side rails (A).
5. Attach headboard brackets (B) to front of side rails (A) with enclosed bolts (G) and nuts (H). Brackets should be positioned so that slots line up with pre-drilled holes in headboard.

**Assembly Instructions for Full/Queen:**

1. Lay side rails on floor with attached cross arms (A) facing inward. Swing cross arms out to 90-degree angles.
2. Overlap cross arms. Insert rivet heads on one cross arm into the proper keyholes on the other cross arm. (See detail shown.) Slide cross arms apart to lock in place.
3. Attach cross support (E) with screws (L) and nuts (M) as shown. (Cross support may be installed diagonally for full size.)
4. Insert a socket (C) and caster (D) into the opening at the bottom of each corner leg.
5. Tap plastic glide (F) onto cross support leg.
6. Slide sheet savers (I) onto open ends of side rails (A).
7. Attach headboard brackets (B) to front of side rails (A) with enclosed bolts (G) and (H) nuts. Brackets should be positioned so that slots line up with pre-drilled holes in headboard.

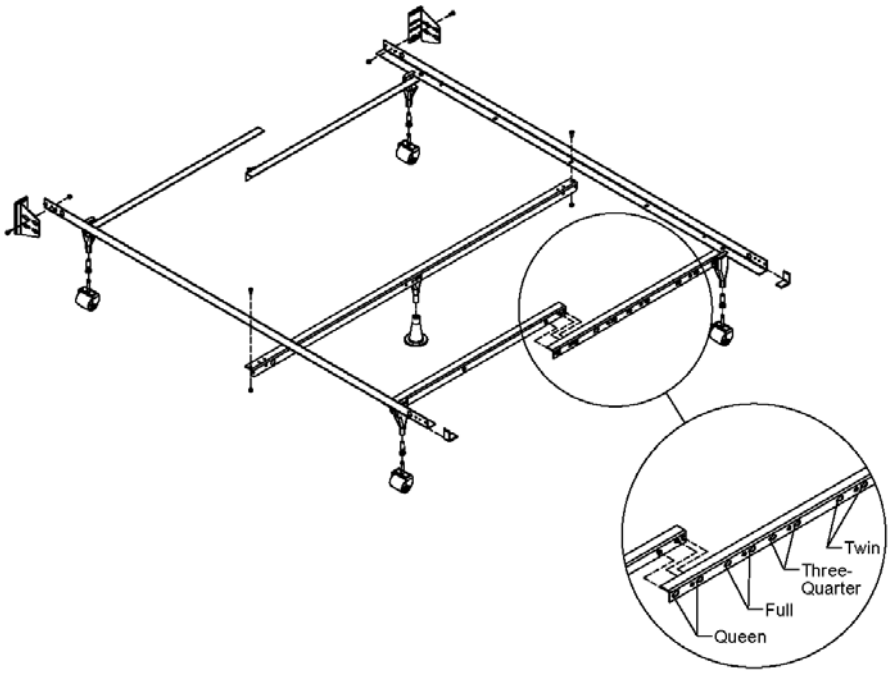


PN.99300885 3-06